# DEKKER VACUUM TECHNOLOGIES, INC.

## 9. ROTARY VANE PUMPS

**DuraVane**
Lubricated rotary vane pump
RVL076H

**DuraVane lubricated rotary vane pumps are single-stage pumps with an integrated closed loop oil recirculation system.**

- Heavy duty construction.
- Compact design, small footprint.
- High-tech vane material provides long vane life.
- Gas ballast valve is standard.
- Low noise level.
- Low maintenance.
- Air-cooled design.
- Internally mounted inlet check valve.
- Float type oil-recovery valve ensures maximum air/oil separation.
- High efficiency multi-stage exhaust filter removes 99.9% of exhaust smoke.
- Direct drive.
- Simple to install.

**Performance characteristics**

| | |
|---|---|
| Displacement: | 75CFM |
| Final pressure: | 0.1Torr |
| Motor 50Hz: | 3HP TEFC |
| Motor 60Hz: | 4HP TEFC |
| Voltage: | 208/230/460V/3phase |
| Speed: | 1450/1800RPM |
| Noise level(at 3ft): | 68dBA |
| Oil reservoir cap.: | 3.2qt |
| Oil type: | Duratex 100 |
| Weight: | 155Lbs |
| Inlet conn.: | 1-1/2"NPT |
| Discharge conn.: | 1-1/4"NPT |

RVL076H

Based on 29.92 inch Hg (1013 mbar) barometric pressure.
Inlet temperature 70°deg. F.

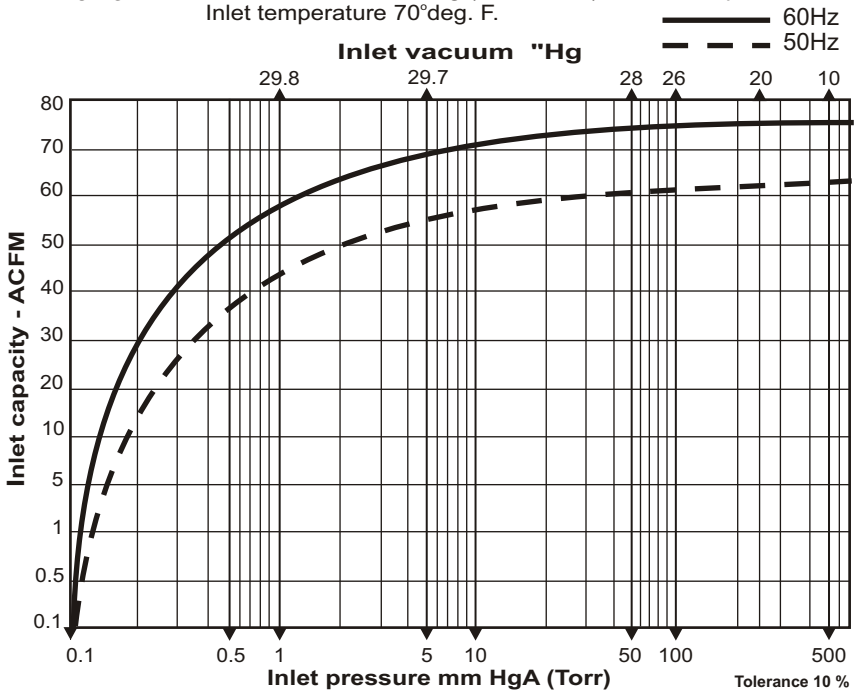


RVL076H

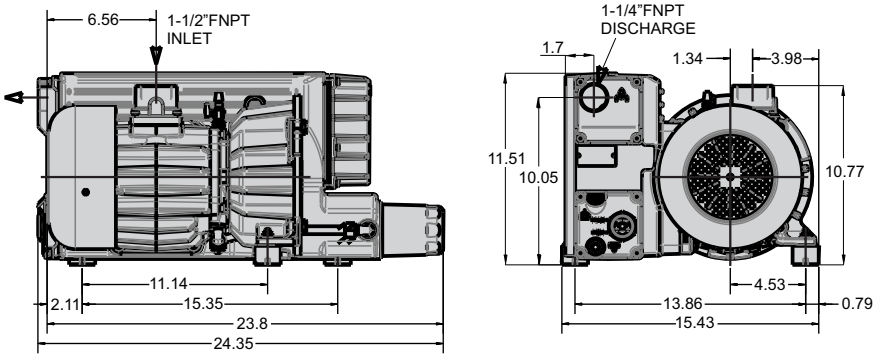


Information contained in this document is for reference only. Subject to change without notice.